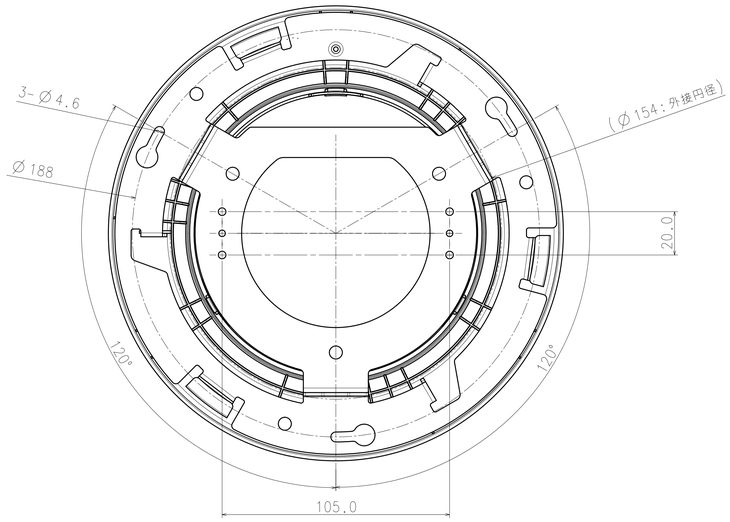
3-∅4.6
∅188
(∅154：外接円径)
20.0
120°
120°
105.0

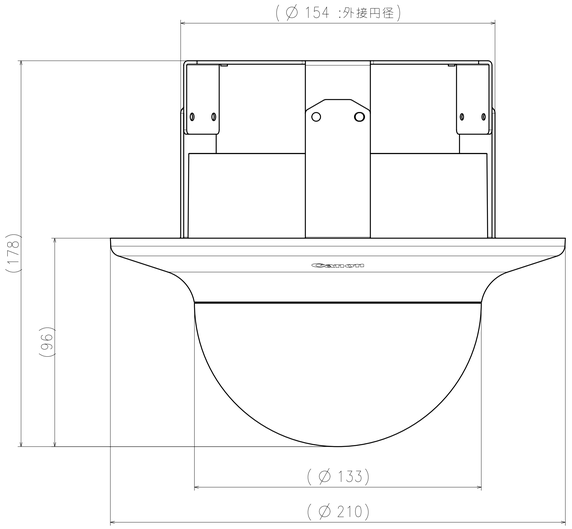
(∅154 :外接円径)
(178)
(96)
(∅133)
(∅210)

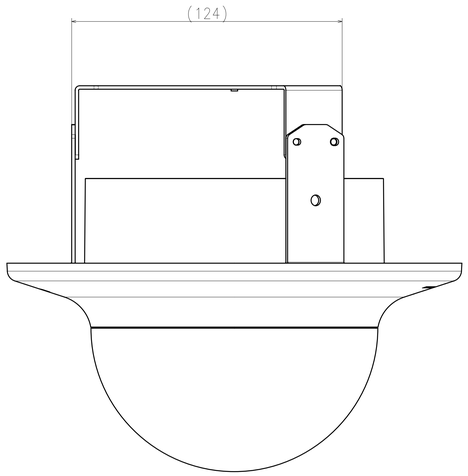
(124)

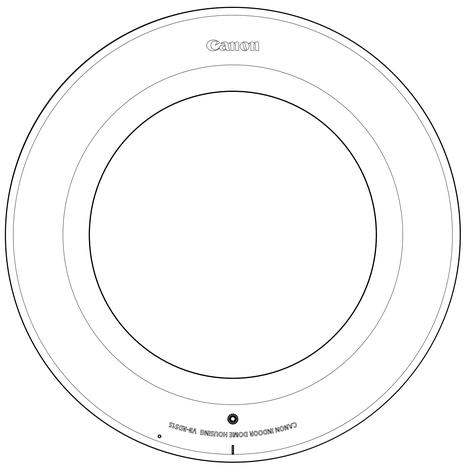
Canon
CANON INDOOR DOME HOUSING VB-M315