Canon

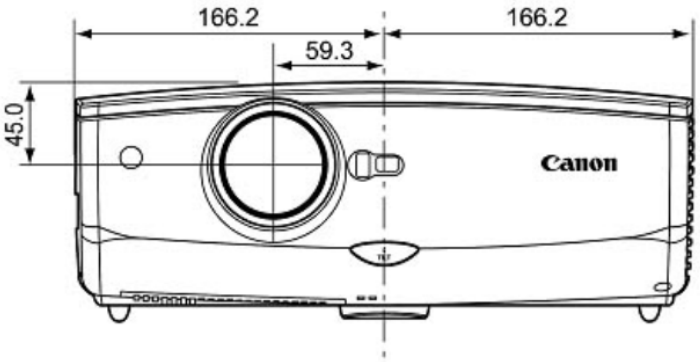

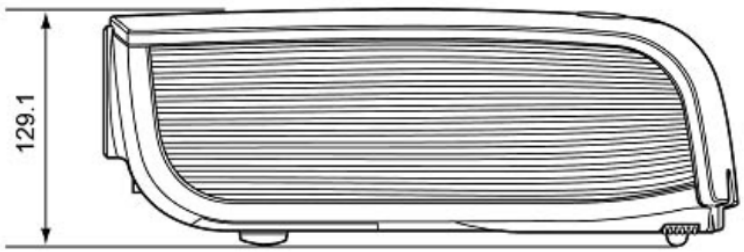

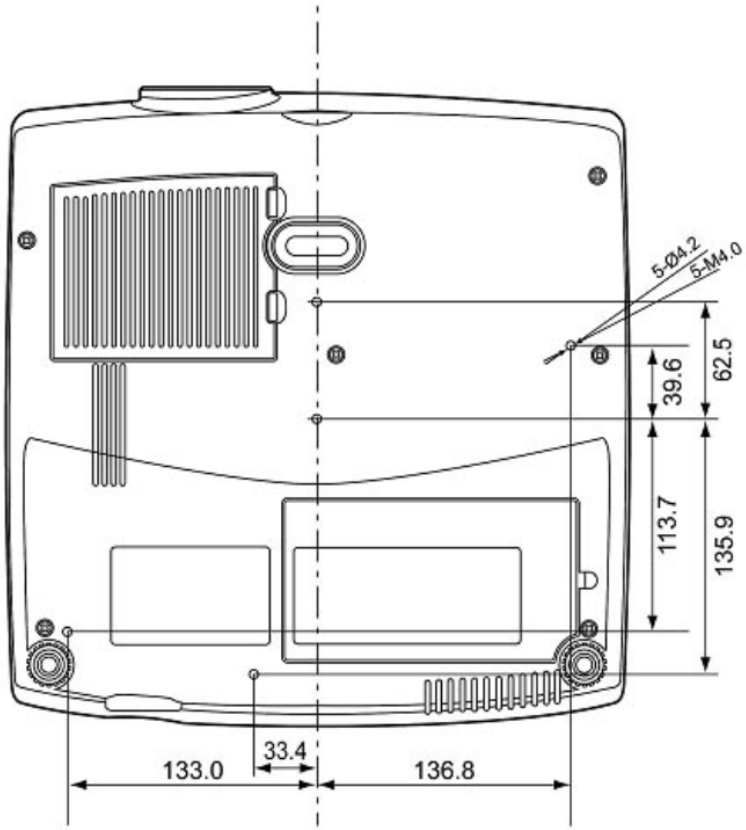

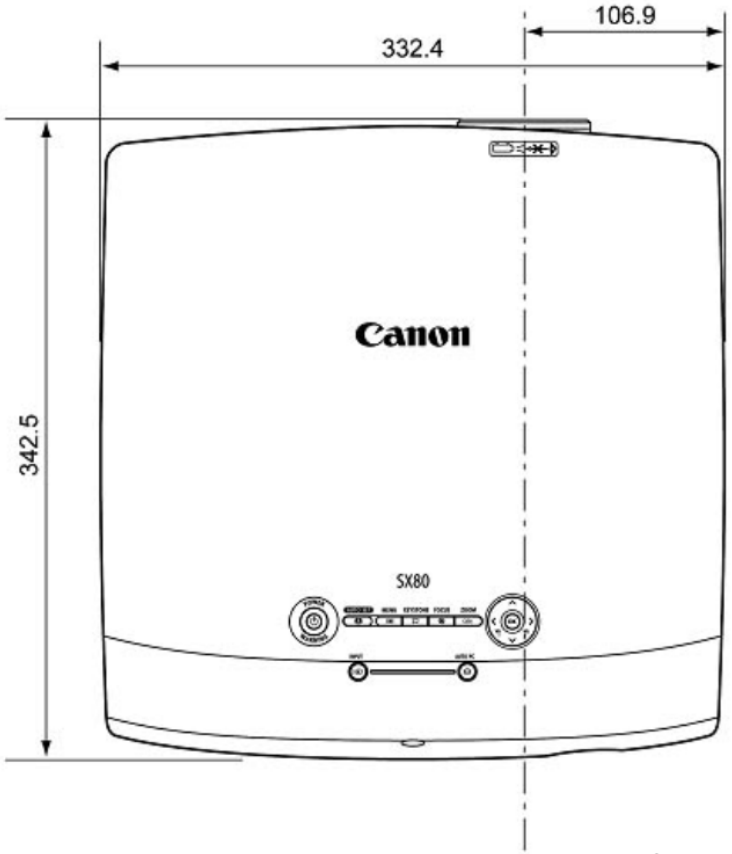

SX80 Mark II